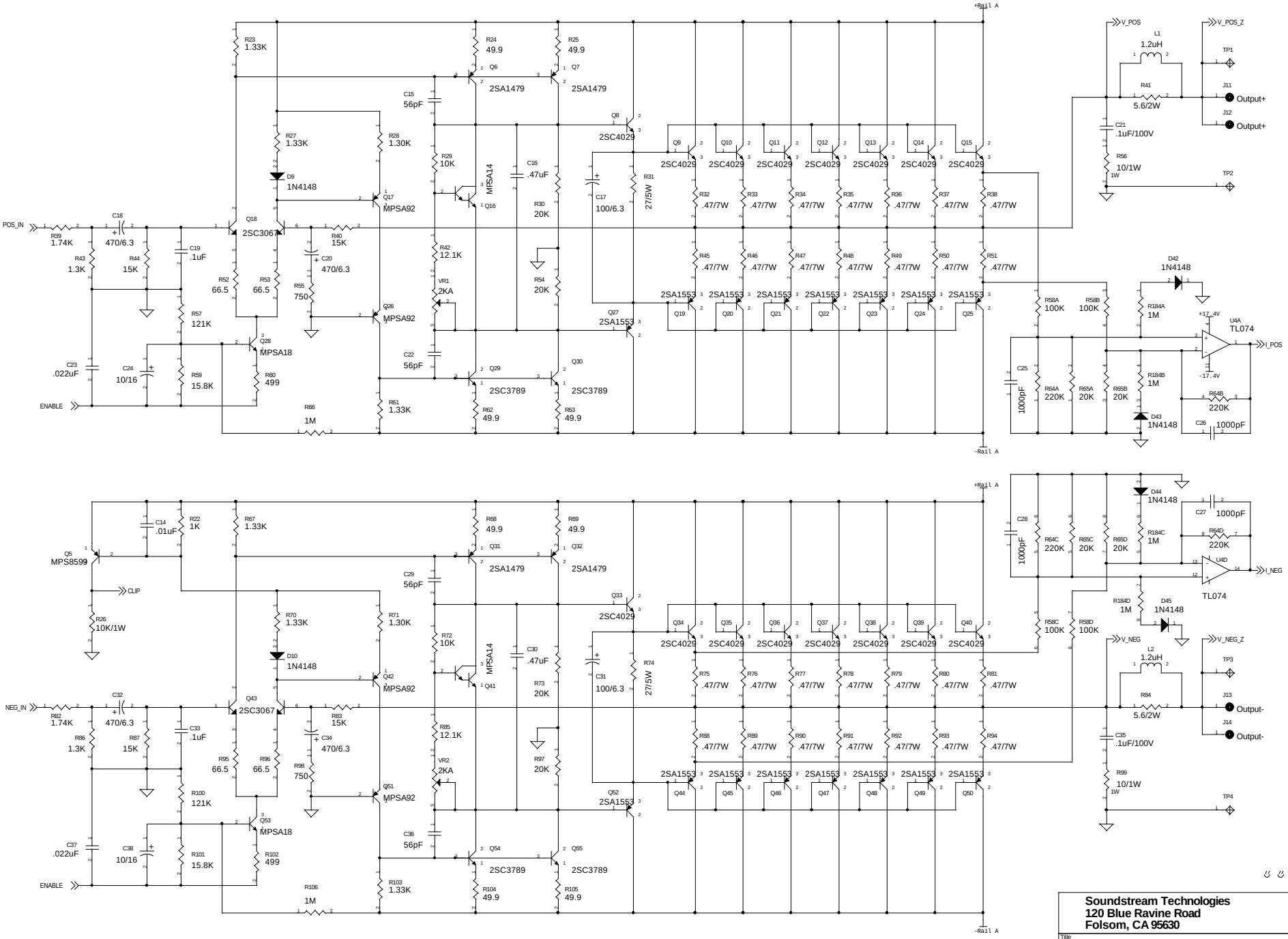

Soundstream Technologies
120 Blue Ravine Road
Folsom, CA 95630

Title: Tarantula Main PCB: Power Amps		
Size: Custom	Document Number: 7400-0017-02	Rev
Date: Thursday, October 14, 1999	Sheet 1 of 3	

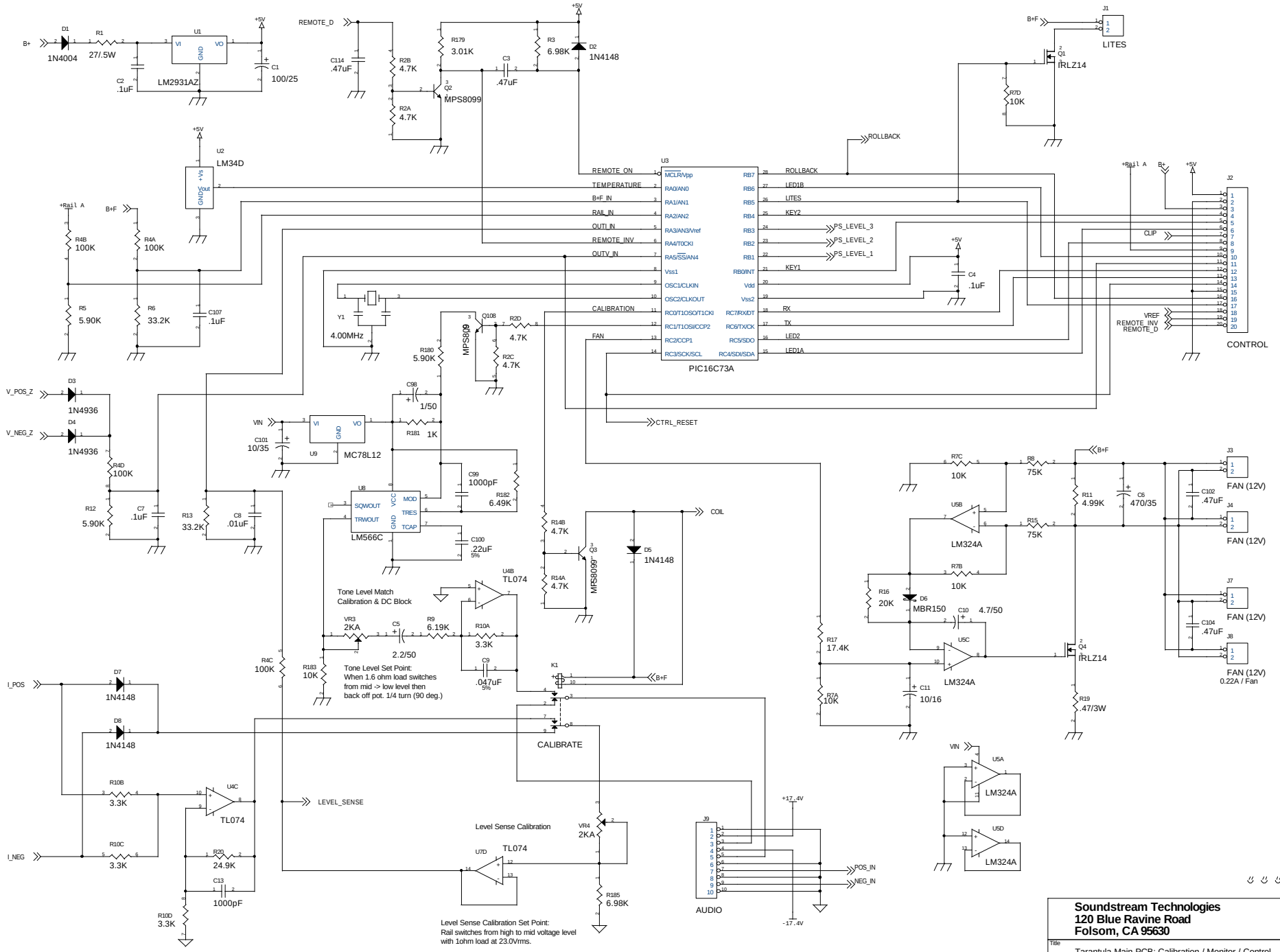

Soundstream Technologies
120 Blue Ravine Road
Folsom, CA 95630

Title	Tarantula Main PCB: Calibration / Monitor / Control	
Size: Custom	Document Number: 7400-0017-02	Rev
Date: Thursday, October 14, 1999	Sheet 2 of 3	

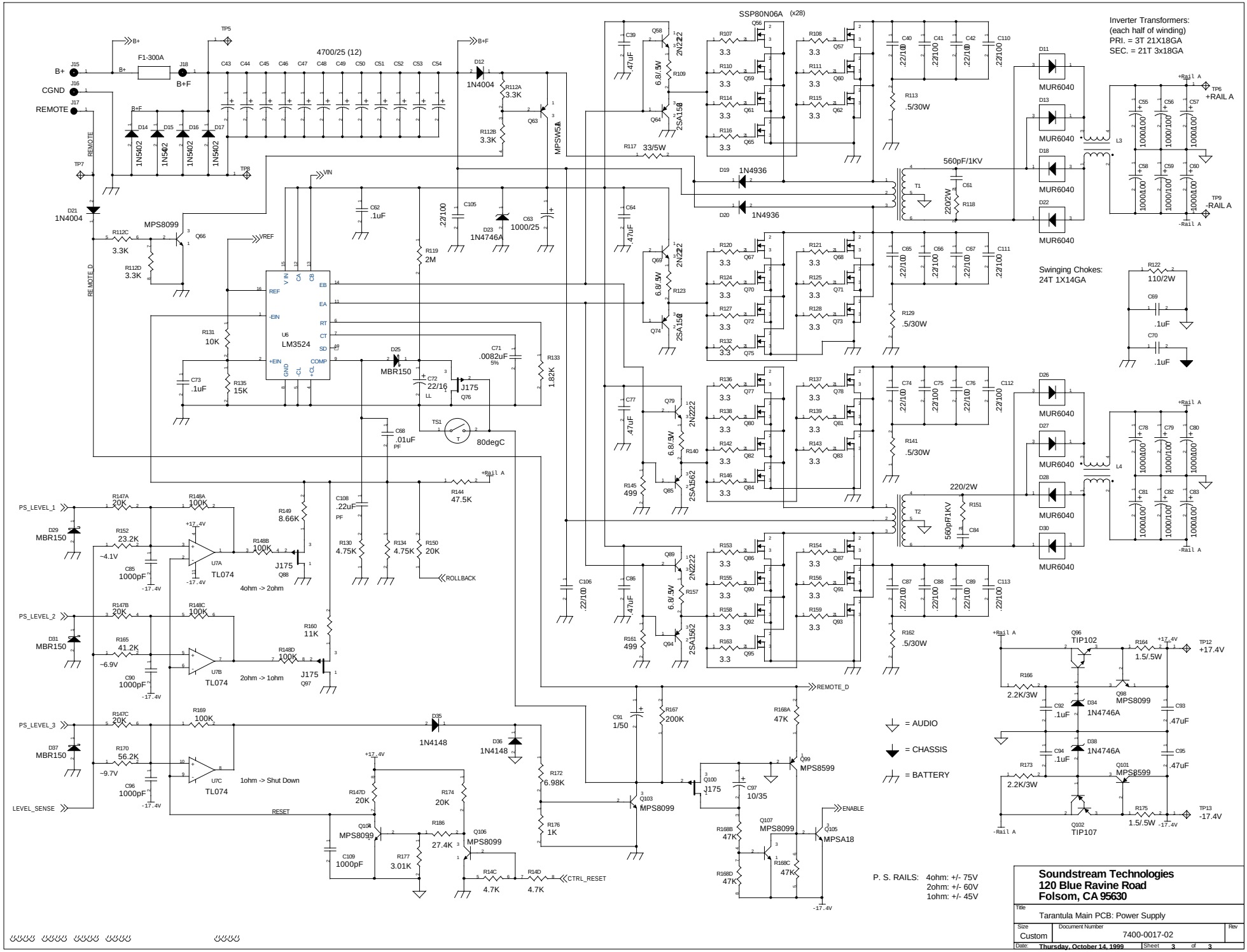
SSP80N06A (x28)
Inverter Transformers:
(each half of winding)
PRI. = 3T 21X18GA
SEC. = 21T 3x18GA
Swinging Chokes:
24T 1X14GA
4700/25 (12)
F1-300A
B+
CGND
REMOTE
B+F
REMOTE_D
VIN
VREF
LM3524
U6
MPS8099
MPSW56
MPSA18
MUR6040
+Rail A
-Rail A
+17.4V
-17.4V
TL074
U7A
U7B
U7C
J175
PS_LEVEL_1
PS_LEVEL_2
PS_LEVEL_3
LEVEL_SENSE
RESET
ROLLBACK
CTRL_RESET
ENABLE
80degC
4ohm -> 2ohm
2ohm -> 1ohm
1ohm -> Shut Down
= AUDIO
= CHASSIS
= BATTERY
P. S. RAILS: 4ohm: +/- 75V
2ohm: +/- 60V
1ohm: +/- 45V
Soundstream Technologies
120 Blue Ravine Road
Folsom, CA 95630
Title
Tarantula Main PCB: Power Supply
Size
Custom
Document Number
7400-0017-02
Rev
Date: Thursday, October 14, 1999
Sheet 3 of 3